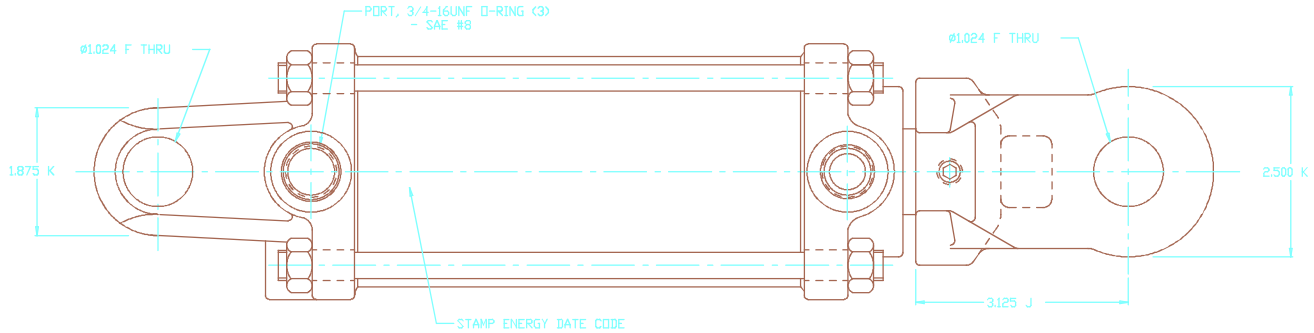

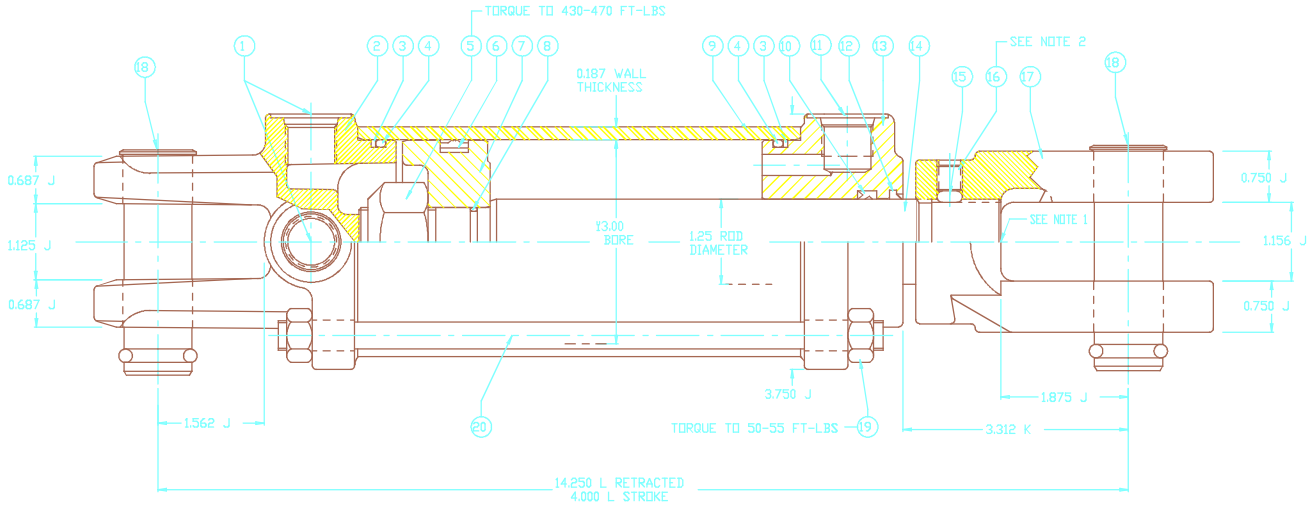

CYLINDER RATING

CYLINDER PRESSURE RATING ..... 3,265 PSI

OPERATING TEMPERATURE RANGE ..... -40 F TO 200 F

MINIMUM WALL BURST PRESSURE ..... 9,966 PSI

MAXIMUM RECOMMENDED ROD SPEED ..... 100 FT/MIN.
MINIMUM RECOMMENDED ROD SPEED ..... 5 FT/MIN.
**** ROD SPEEDS UNDER 5 FT/MIN MAY CAUSE
SEAL NOISE DUE TO STICK/SLIP.

RECOMMENDED MAXIMUM COLUMN LOAD AT FULL EXTENSION
WITH 2:1 SAFETY FACTOR, NO SIDE LOAD,
PINNED ENDS AND NO INTERMEDIATE BRACING ..... 18,250 LBS
(2,600 PSI)

BORE :	3.000	STOP TUBE :	0
ROD DIA :	1.250	FINISH :	55/65 BLACK
STROKE :	4.000	ROD FINISH :	HARD CHROME

NOTES: 1) TIGHTEN CLEVIS UNTIL BOTTOM OF THROAT IS FLUSH WITH END OF ROD.

2) TIGHTEN SET SCREW SECURELY UNTIL NYLON BALL IS DEFORMED INTO THREADS.

3) INSTALL: (2) A-9011 CLEVIS PIN

4) SEAL KIT: 18117X

5) NO DECALS

6) BULK PACK

TRIPLE "C"

ALL DRAWINGS AND BLUEPRINTS SUPPLIED BY ENERGY MANUFACTURING CO. ARE SUBJECT TO PROTECTION UNDER THE UNITED STATES COPYRIGHT LAW, WHICH AMONG OTHER THINGS, PROHIBITS REPRODUCTION, DERIVATION OR DISTRIBUTION OF COPIES. THE DRAWINGS CONTAIN TRADE SECRETS OF ENERGY MANUFACTURING CO. AND ARE SUPPLIED TO THE VENDOR OR CUSTOMER ON A CONFIDENTIAL BASIS AND SHALL NOT BE DISCLOSED OR DISTRIBUTED TO OTHERS WITHOUT THE PRIOR EXPRESS WRITTEN PERMISSION OF ENERGY MANUFACTURING CO. ALL DRAWINGS AND OTHER WRITTEN MATERIALS PROVIDED TO THE VENDOR OR CUSTOMER SHALL BE RETURNED TO ENERGY MANUFACTURING CO. WHEN THE NEED FOR SUCH MATERIALS IS ENDED, OR UPON THE EARLIER DEMAND FOR THE RETURN OF THE MATERIALS BY ENERGY MANUFACTURING CO.

DO NOT SCALE PRINT

UNLESS OTHERWISE SPECIFIED
Letters after dimensions defines tolerances as follows

A +/- 0.00015	G +/- 0.010
B +/- 0.0003	H +/- 0.020
C +/- 0.0005	J +/- 0.030
D +/- 0.001	K +/- 0.050
E +/- 0.002	L +/- 0.125
F +/- 0.005	Angle +/- 2°

Third Angle Projection | No. | Revision | Date | Appr. By

Material:

HT. Treat:
Finish:

Drawn by: P.D. 10.23.01
Checked by:
Approved By:

ENERGY MFG. CO., INC.

Title: HPTR-3004,1.25 ROD,B1,R1,SP

Scale: FULL

25605D01